CLEANTECH COMPETENCE

Fuel Cells in Zero Emission Mobility

E-Move 360 Munich 2019

Rohit Prasad, Sales and Marketing

PROTON MOTOR
Fuel Cells · Power Systems

Proton Motor Fuel Cell
Benzstraße 7
82178 Puchheim
Germany

Phone : +49 (0)89 1276265-20
Fax: +49 (0)89 1276265-99
E-Mail: sales@proton-motor.de
Web: www.proton-motor.de

Who we are

PROTON MOTOR
Fuel Cells · Power Systems

Proton Motor Fuel Cell GmbH is an complete energy solutions provider with A focus on developing and manufacturing LT-PEM fuel cell systems

- PEMFC development since 1994 (Magnet Motor),
- PM founded 1998 as independent company,
- Today 75 employees.
- Focus on providing complete energy solutions in maritime, transport and stationary applications

- Proton Motor Fuel Cell GmbH, Headquarters Puchheim
- Production plant, labs & offices on ca. 6000 m2.
- Complete development cycle from feasibility studies to delivery on onsite training

© Proton Motor

Core Competences

PROTON MOTOR
Fuel Cells · Power Systems

Stack Products

- Cell design: flow field layout & simulation of fuel cell performance
- Stack design: design of stack components, material testing
- Evaluation and certification of the Proton Motor stack products

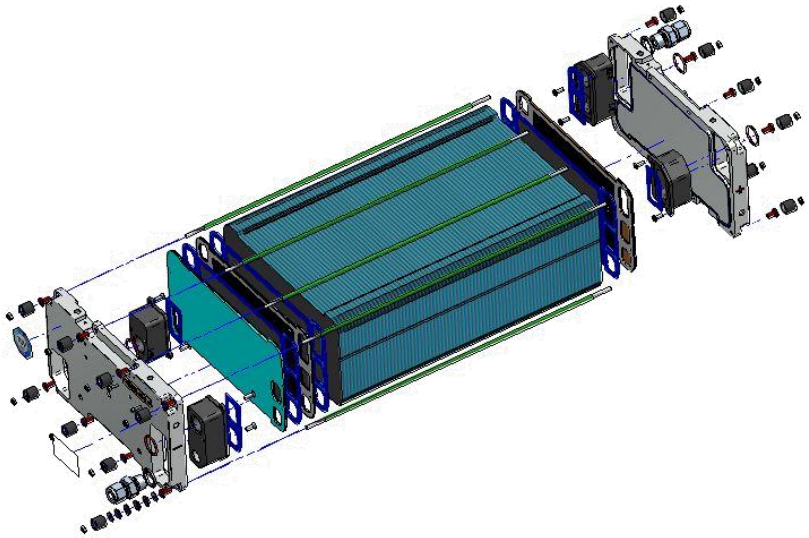

System Products

- Development of components for BoP (incl. control system) in co-operations
- Development and production of PEFC systems in different levels of integration
- Development and assembly of fuel cell based turnkey applications (FC hybrids)

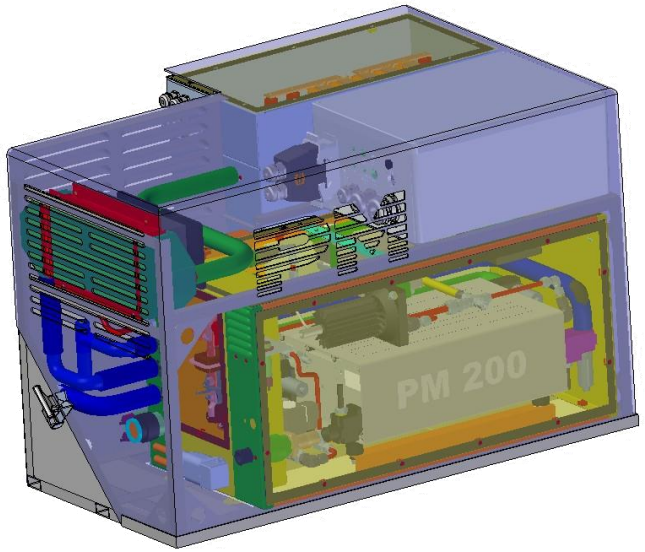

© Proton Motor

Our History

PROTON MOTOR
Fuel Cells · Power Systems

1994
Start development of Fuel Cell Technology

2000

Bayernbus set into operation

2006
Foundation Proton Power Systems PLC

2009

World first Triple Hybrid City Bus

2012

EPS System installed in Bachhausen

2015
Cooperation with Deutsche Bahnbau Gruppe

1998
Foundation Proton Motor Fuel Cell GmbH

2001
World first Fuel Cell Fork Lift

2008
Fuel Cell Ship "Alsterwasser" in operation

2011
Road approval Newton with HyRange®

2015
Integration of Spower GmbH

2016
Presentation of FC REEV vehicle

© Proton Motor

FCREEV - Fuel Cell Range Extended Electric Vehicle

© Proton Motor and Magna Steyr

FCREEV Targets

FCREEV = Fuel Cell Range Extended Electrical Vehicle

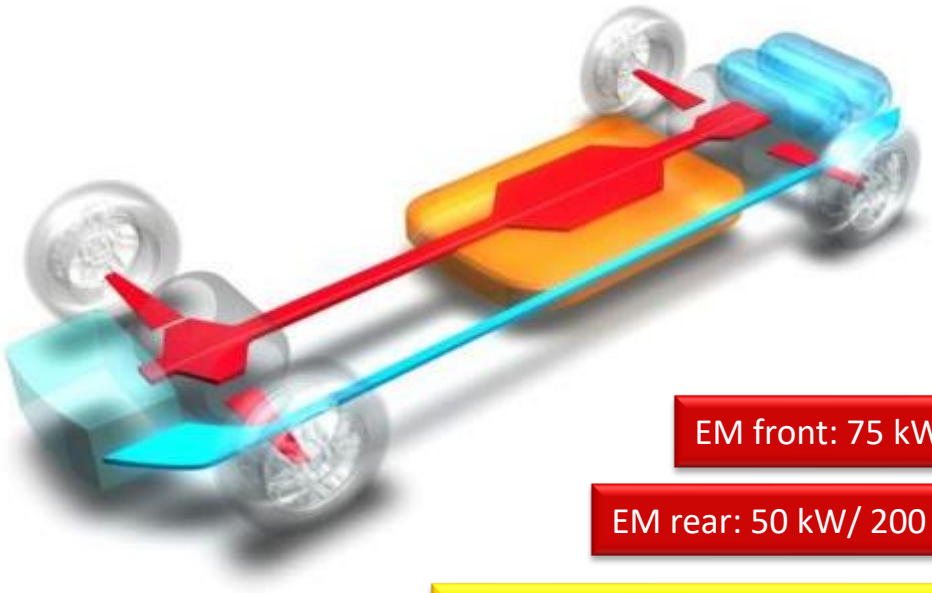

VEHICLE TARGETS:

- Zero emission
- Long driving range
- Fast refuelling time
- AWD powertrain

EM front: 75 kW/ 280 Nm

EM rear: 50 kW/ 200 Nm

HV Battery: 15 kWh (inst.)

FC System: 25 kW (net.)

H2 Storage System: 3 kg / 70 MPa

© Proton Motor and Magna Steyr

FCREEV specifications

PROTON MOTOR
Fuel Cells · Power Systems

Magna FC REEV

Fuel cell power:	25 kW
Li-Ion battery:	15 kWh
Driving range:	400 km
Propulsion:	Electric 4x4
Acceleration: (0-100)	< 11 sec
Hydrogen:	3 kg @ 700bar
Refueling time:	< 3 min

HyRange® 25 FC REEV System

Type of Fuel Cell System: NT-PEM

Nominal Power:	25 kW
Output Current range:	0 … 500 A
Output voltage range:	35 … 120 VDC
Hydrogen consumption:	1.5 kg/h @nominal load
Air Supply:	Ambient Air
Communication Interface:	CAN v2.0A

MAGNA PROTON MOTOR TU WIEN TECHNISCHE UNIVERSITÄT WIEN HyCentA FFG

© Proton Motor and Magna Steyr

The Fuel Cell System

PROTON MOTOR
Fuel Cells · Power Systems

HYRANGE ®25 FCREEV SYSTEM:

- Fuel cell system: LT-PEM
- Vertical stack orientation
- System efficiency: 51%
- Air supply without humidifier
- Modular system architecture

© Proton Motor and Magna Steyr

Complete Vehicle Package

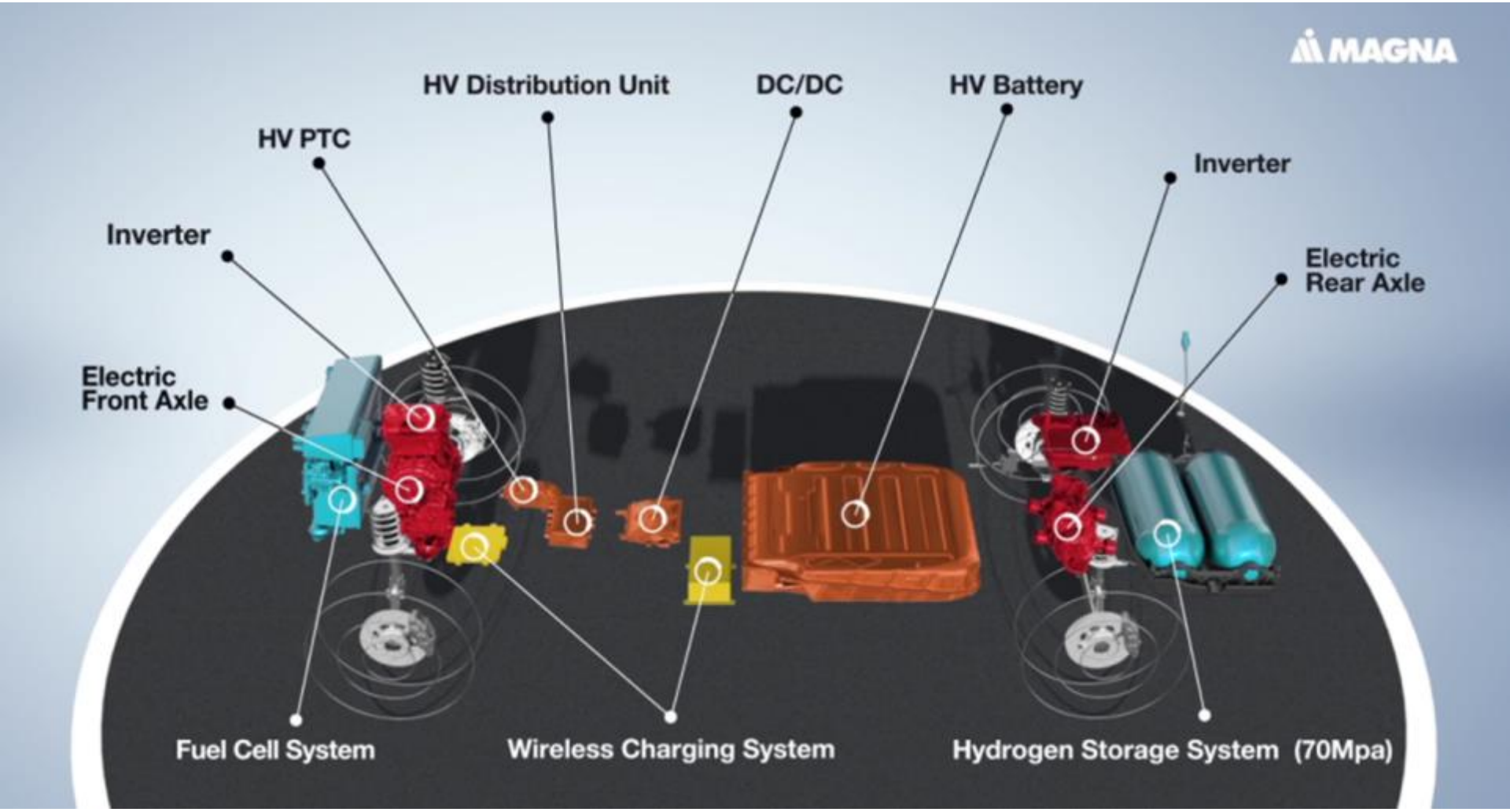

© Proton Motor

Operation Strategy

PROTON MOTOR
Fuel Cells · Power Systems

Hybrid Operating Strategy

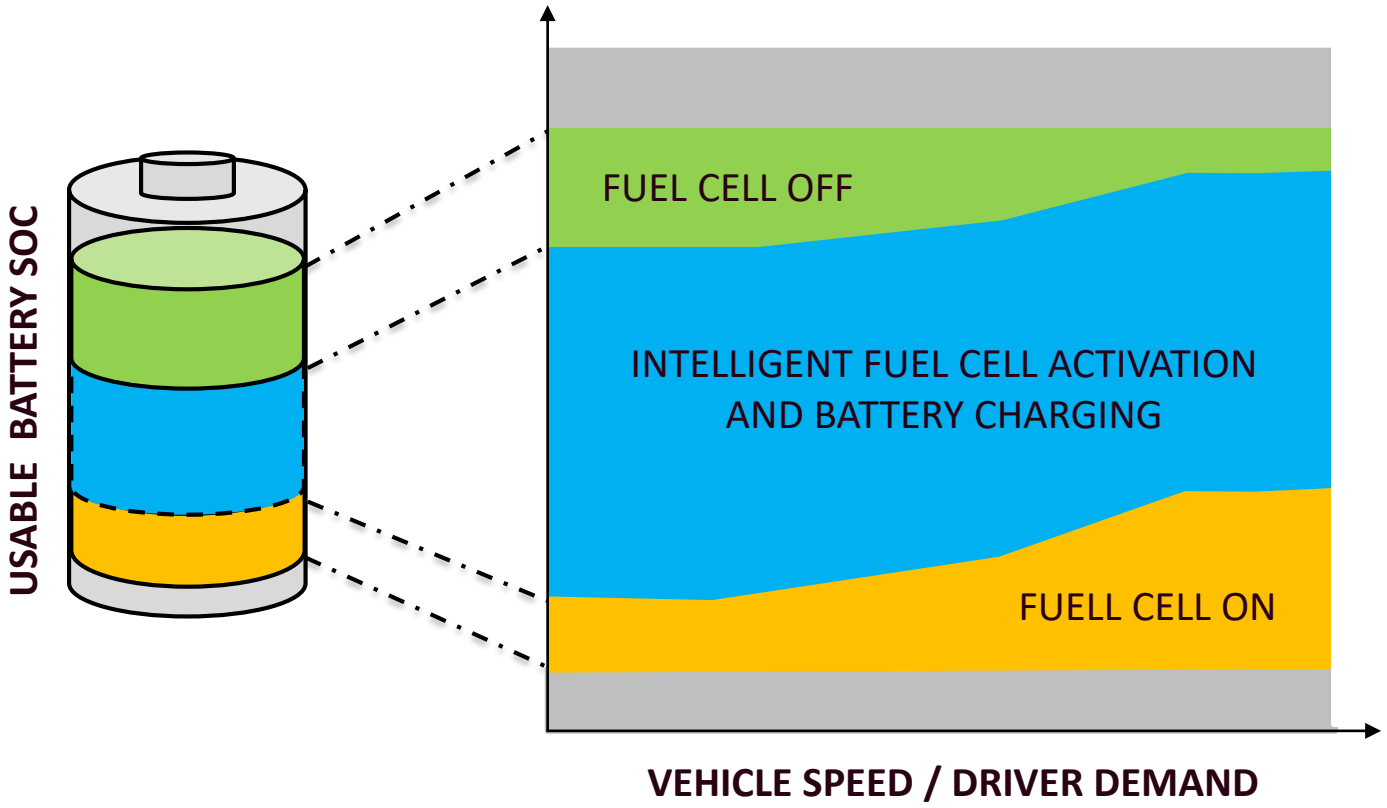

Dynamic variation in vehicle operating modes

© Proton Motor

Multiple Applications

PROTON MOTOR
Fuel Cells · Power Systems

Smith Electric Vehicles Integrated FC System

World record tour Munich - Berlin

Length:	6 m
Payload:	7.400 kg
Fuel cell power:	8,4 kW
Li-Ion battery:	80 / 64 kWh
Propulsion:	120 kW
Hydrogen:	5 kg @ 350bar
	75 $kWh_{electric}$
Consumption:	~0,5 kg H_2/h

Skoda Electric TriHyBus®

Length:	12 m
Passengers:	45
Fuel cell power:	45 kW
Li-Ion battery:	27,4 kWh
Ultracaps:	1 kWh, 200 kW
Propulsion:	120 kW
Hydrogen:	20 kg @ 350bar
Consumption:	8-10 kg H_2

Magna Steyr FC REEV

Fuel cell power:	25 kW
Li-Ion battery:	15 kWh
Driving range:	400 km
Propulsion:	Electric 4x4
Acceleration: (0 - 100 km/h)	< 11 sec
Hydrogen:	3 kg @ 700bar
Refueling time:	< 3 min

© Proton Motor

Why hybrid systems?

PROTON MOTOR
Fuel Cells · Power Systems

Pure battery electric buses & duty vehicles (BEV):

- Limited payload
- Limited driving range
- Driving range in summer and winter very different (A/C & heating)
- Long recharging time for batteries
- Insufficient recharging infrastructure

Pure fuel cell electric vehicles (FCV):

- Still insufficient H_2-infrastructure
- Higher invest for operators (vehicles & infrastructure)
- TCO's of current fuel cell vehicles higher than TCO's of diesel driven vehicles

© Proton Motor

Millbrook London Transport Bus Drive Cycle

PROTON MOTOR
Fuel Cells · Power Systems

Test cycle

- MLTB based on real time data
- Ø speed: 14.15 kph
- Max. speed: 48.75 kph
- Distance: 8.97 km

Customer objectives

- Operating days per year: 350 days
- Operating hours per day: 14 – 16 h (without refueling & recharging)
- Recovery period: 10 years
- Passenger load: 5400 kg
- A/C & heating

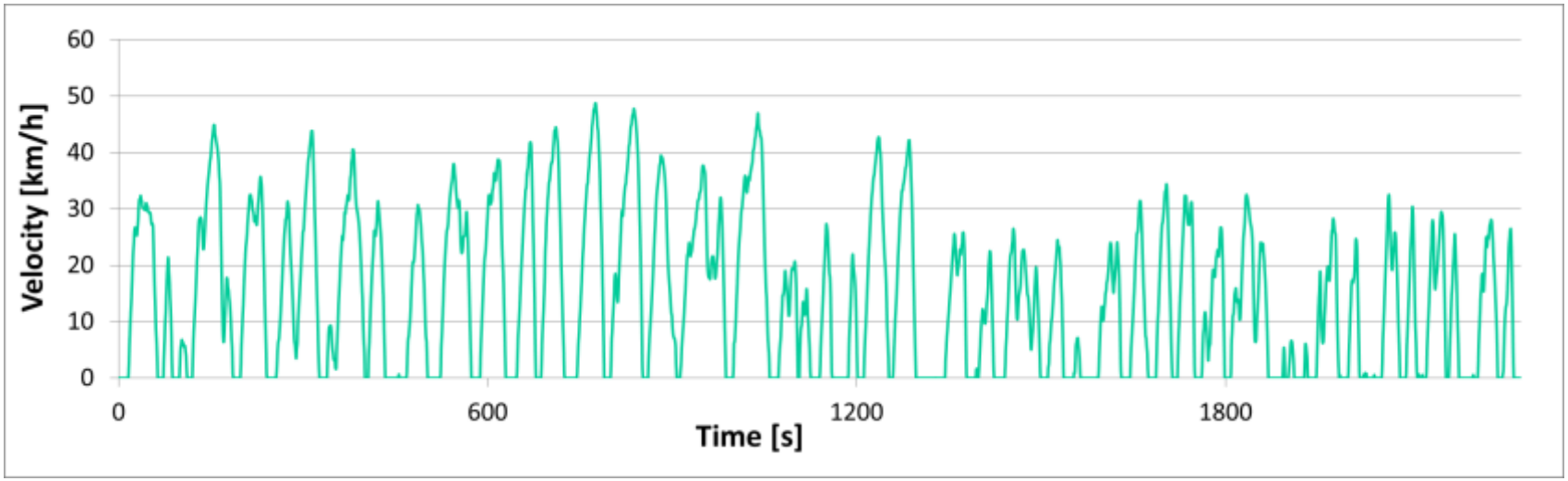

© Proton Motor

Dimensioning of the Drive Train

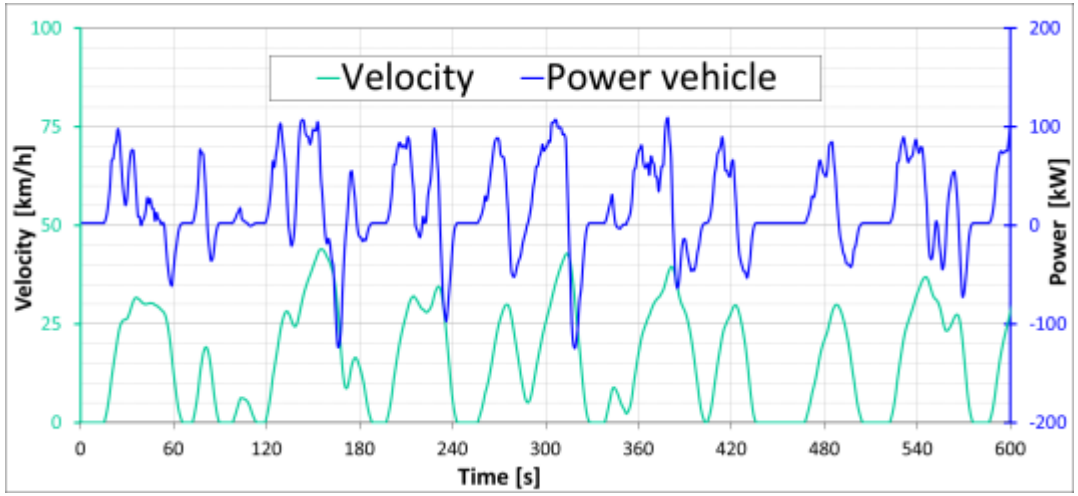

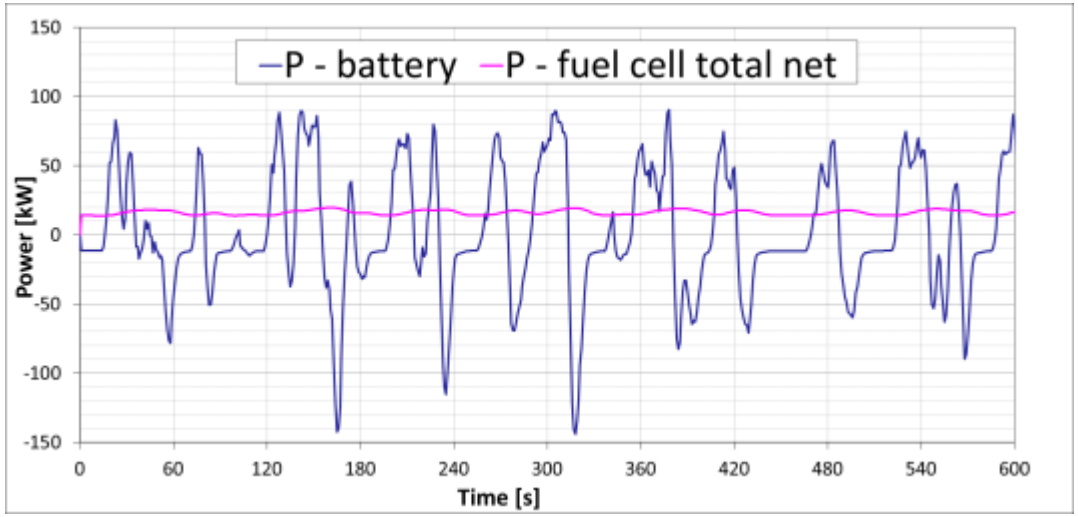

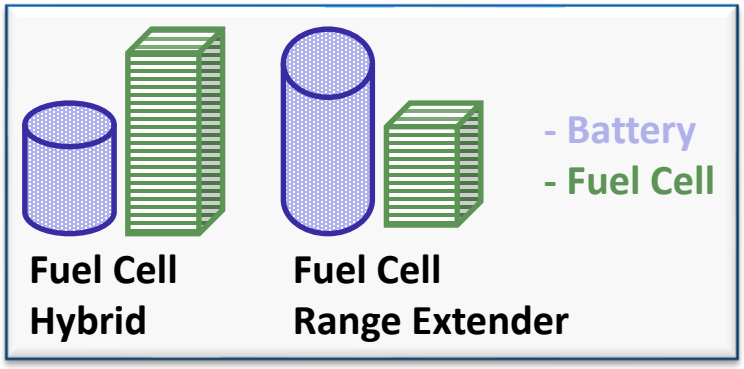

12 m Bus

- Payload: 5400 kg
- Ø power demand: 15.9 kW

Plug-in fuel cell hybrid

- Fuel cell: 25 kW / 30 kW
- Battery: 120 kWh
  580 kg
- H_2 consumption: 7.3 kg/100 km

→ Ø power demand out of fuel cell
→ Peak demand out of battery

© Proton Motor

Electrical Integration of the Fuel Cell

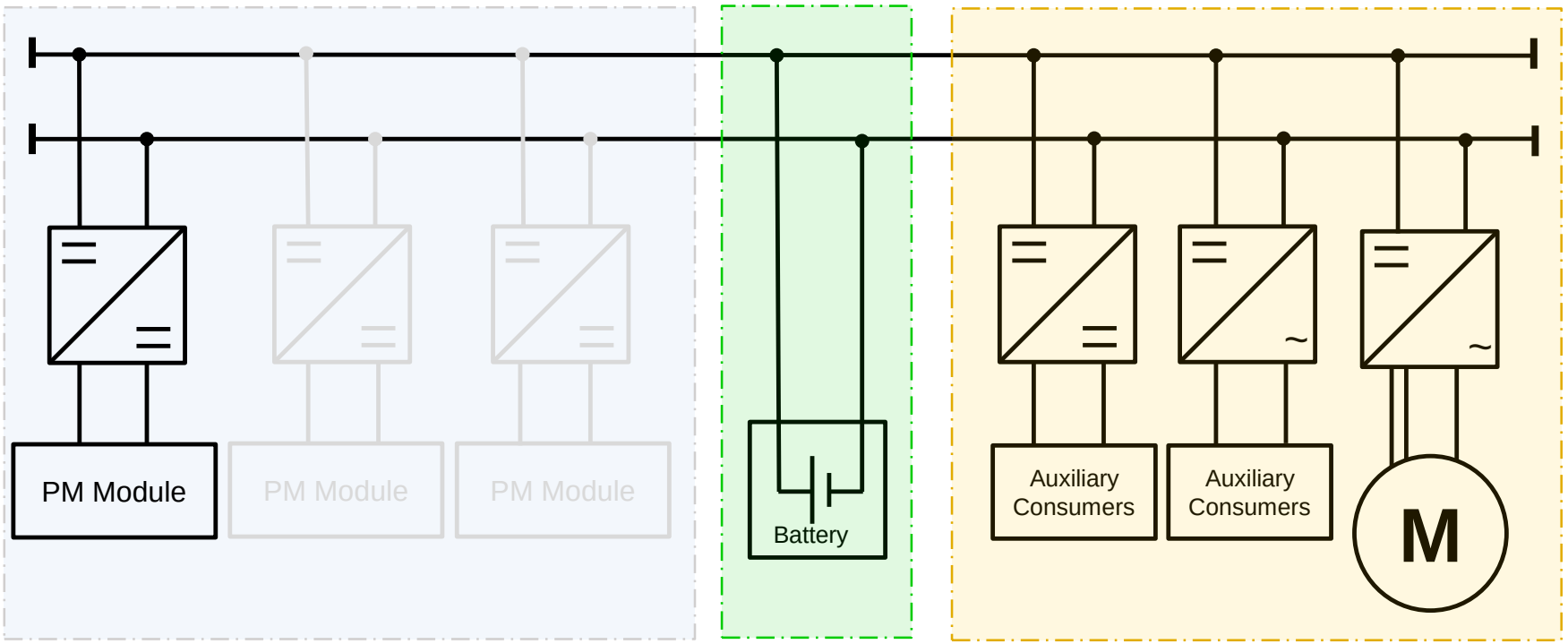

Modular Fuel Cell System

Storage Device

Electric Loads

© Proton Motor

Proton Motor…

© Proton Motor

CLEANTECH COMPETENCE

Thank you for your attention!

PROTON MOTOR
Fuel Cells · Power Systems

Proton Motor Fuel Cell
Benzstraße 7
82178 Puchheim
Germany

Phone : +49 (0)89 1276265-20
Fax: +49 (0)89 1276265-99
E-Mail: sales@proton-motor.de
Web: www.proton-motor.de